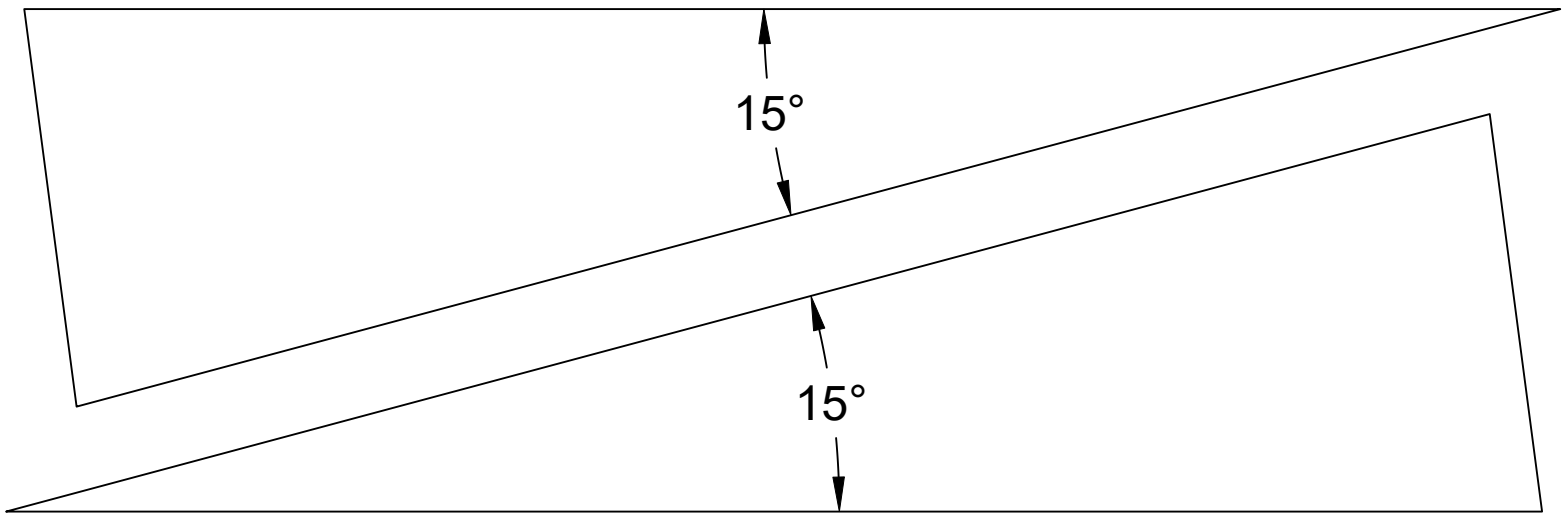

Print triangles on permanent shipping label paper for best results.